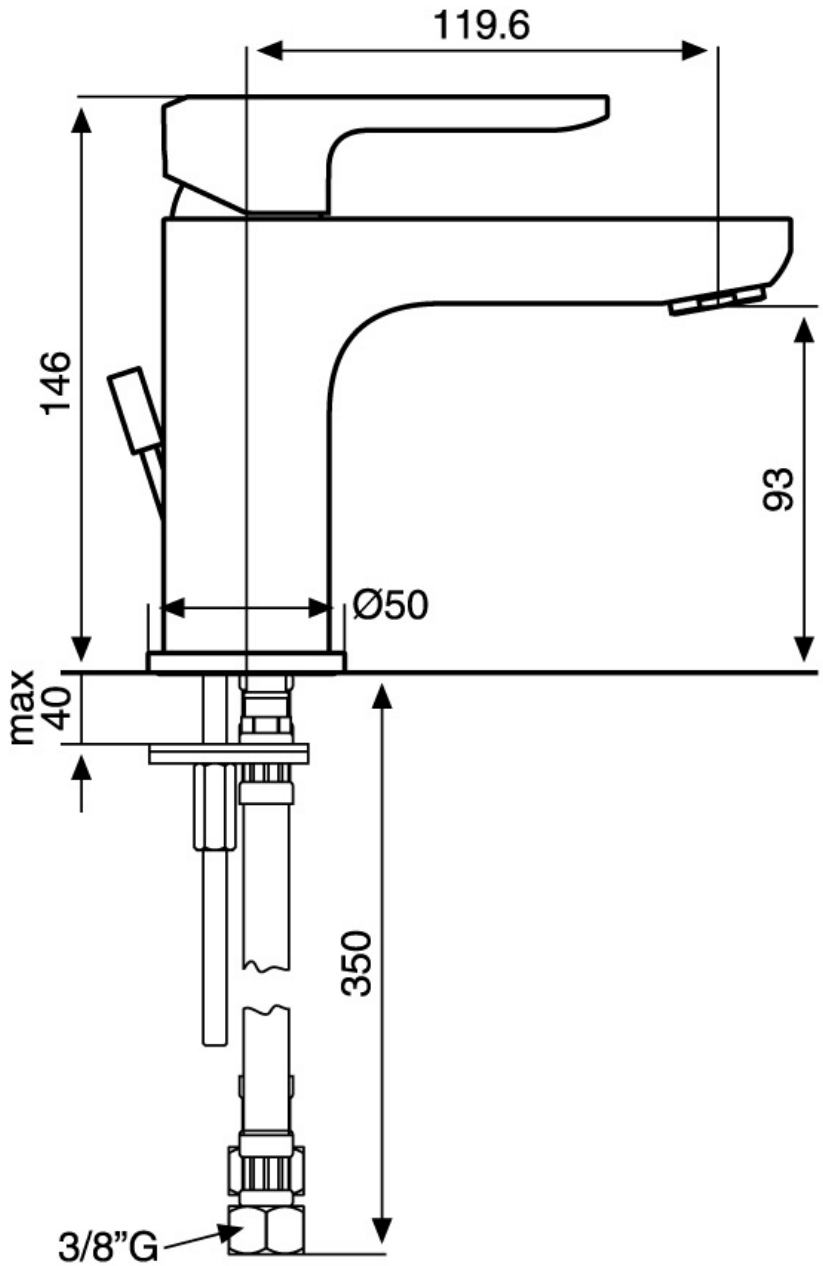
119.6
146
93
Ø50
max
40
350
3/8”G