Vaso sospeso
Wall-hung w.c.
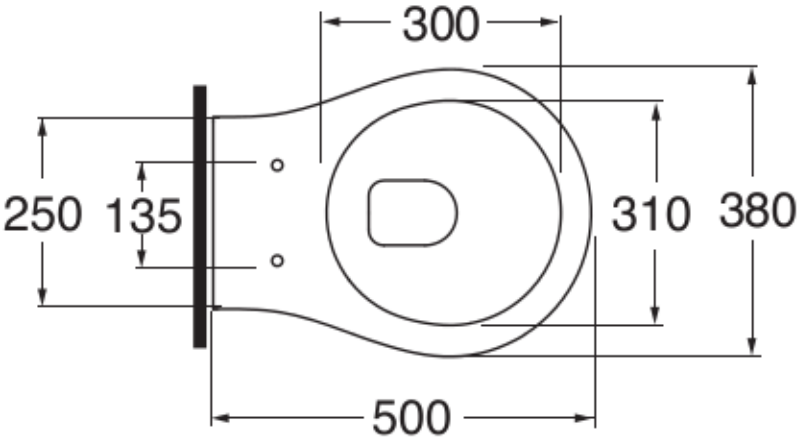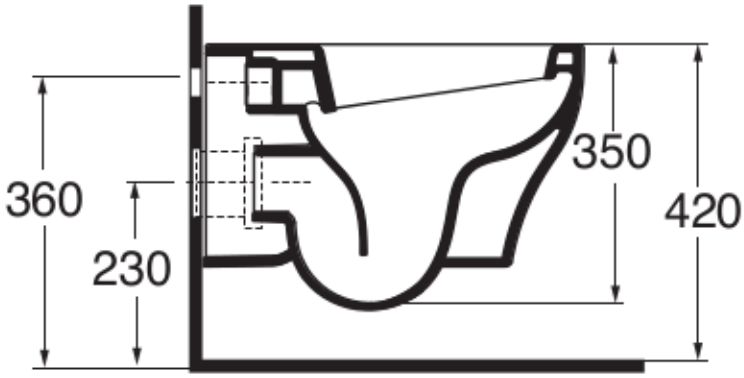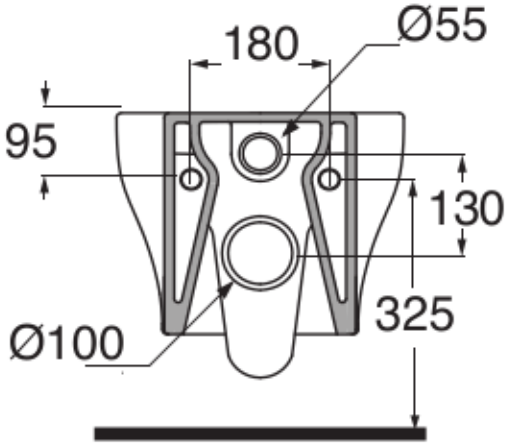
Dimensioni/dimensions: 50x38xH 35cm
Peso/weight: 19 kg