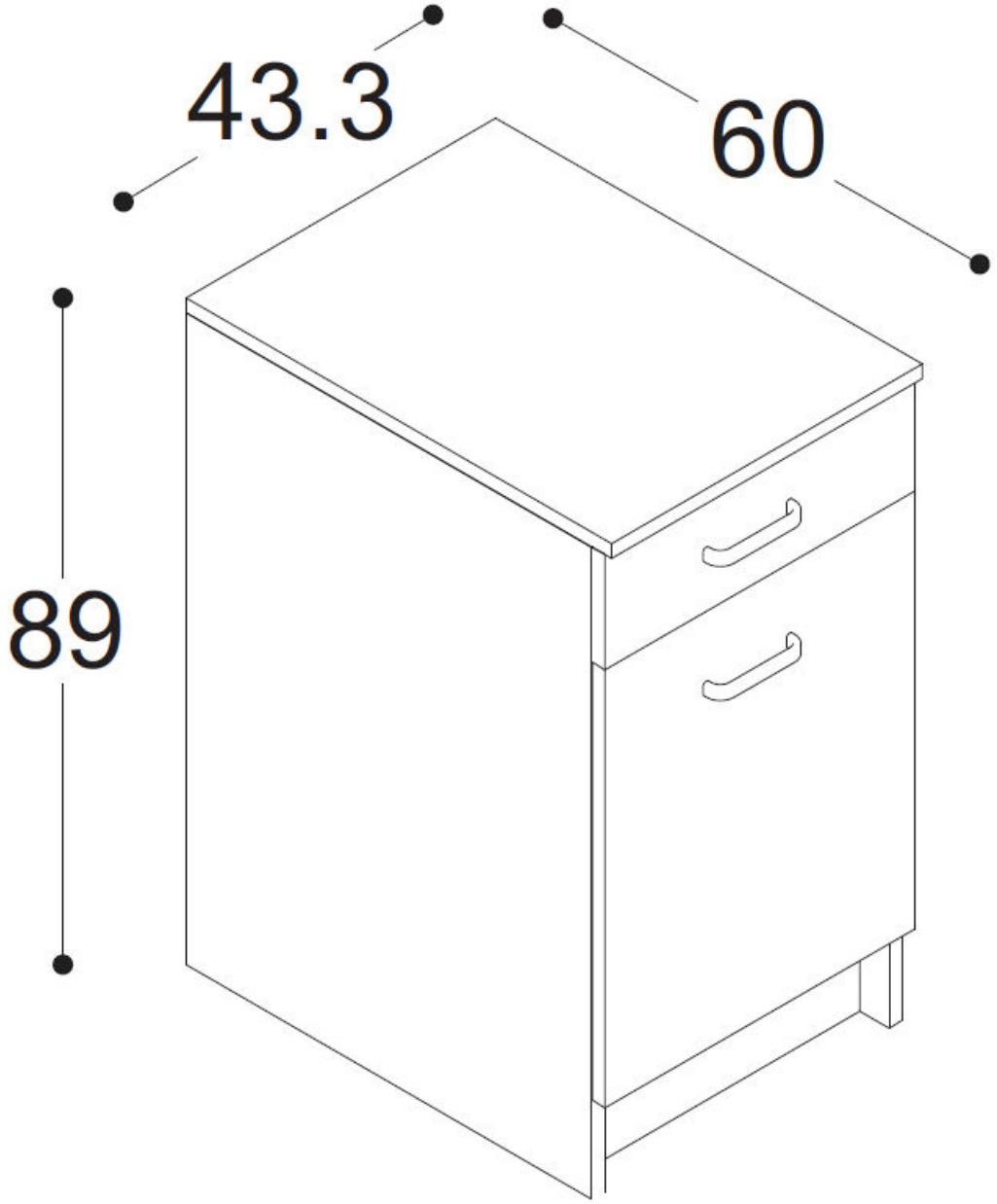
43.3
60
89