LV 75

Lavatoio Super Marte
Super Marte wash-house
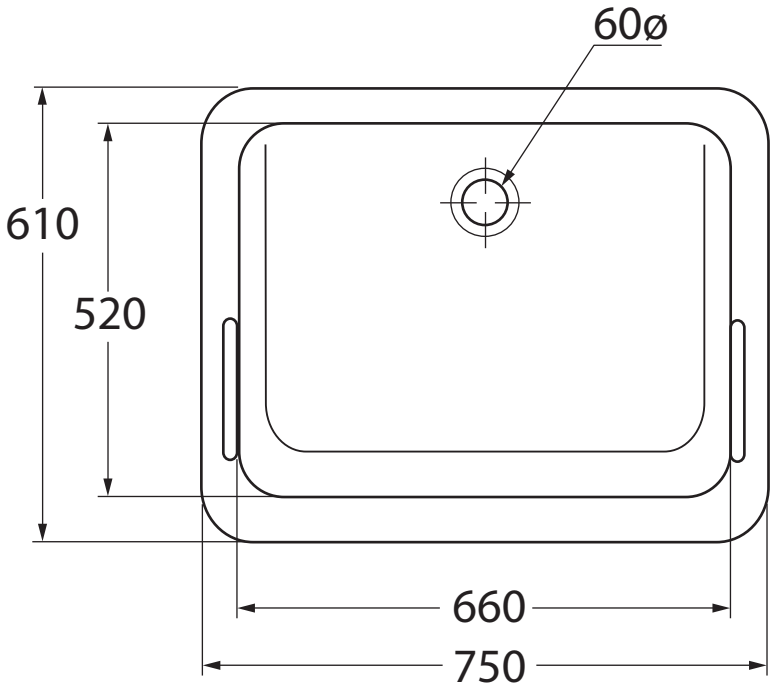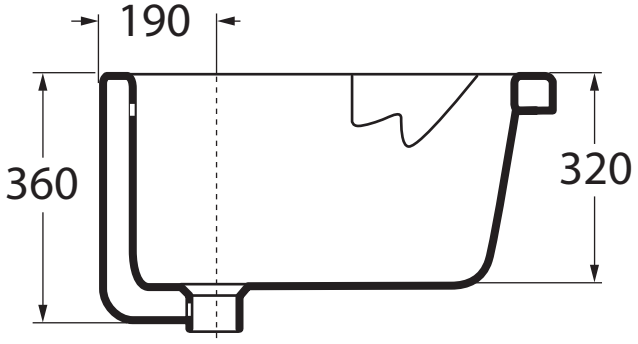
Dimensioni/dimensions: 75x60xH36 cm
Peso/weight: 40 kg