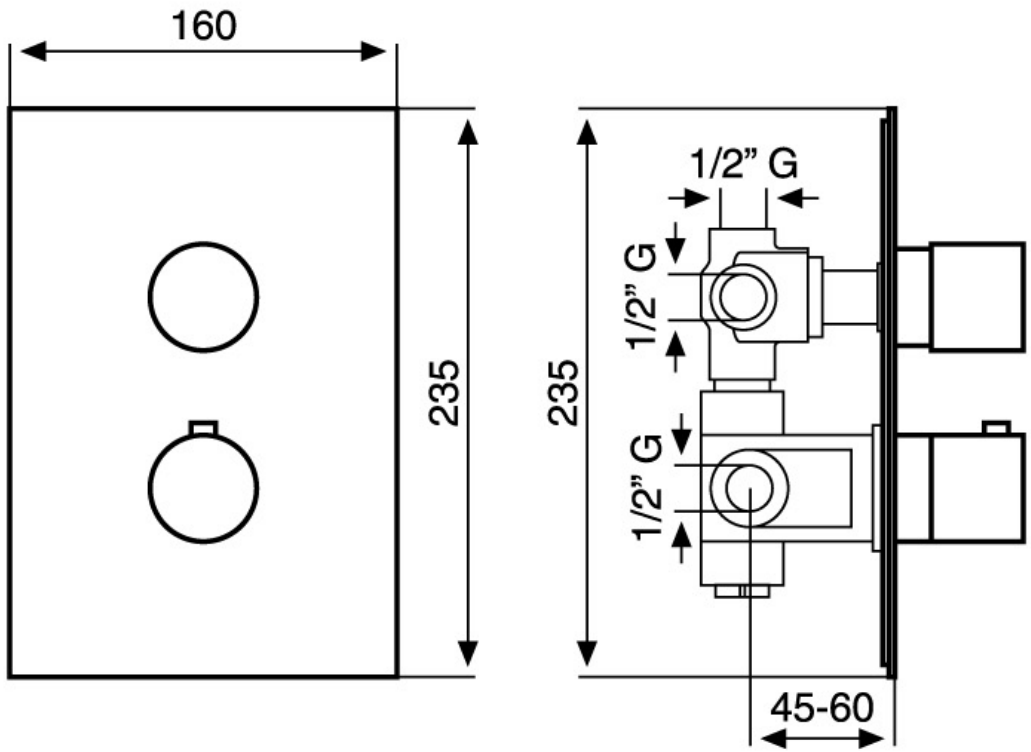
160
235
235
1/2" G
1/2" G
1/2" G
45-60