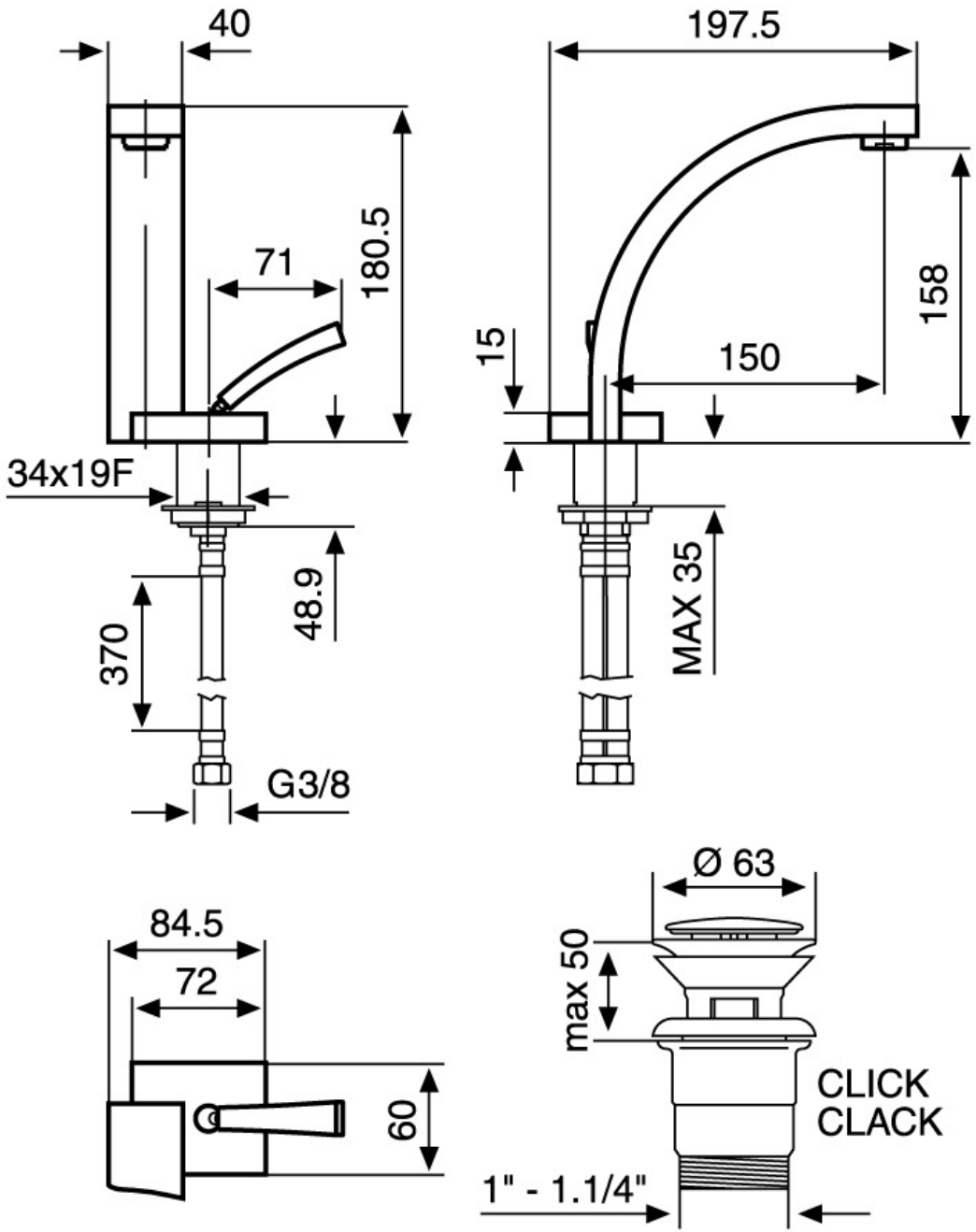
40
197.5
71
180.5
158
15
150
34x19F
48.9
MAX 35
370
G3/8
Ø 63
84.5
72
max 50
60
CLICK
CLACK
1" - 1.1/4"