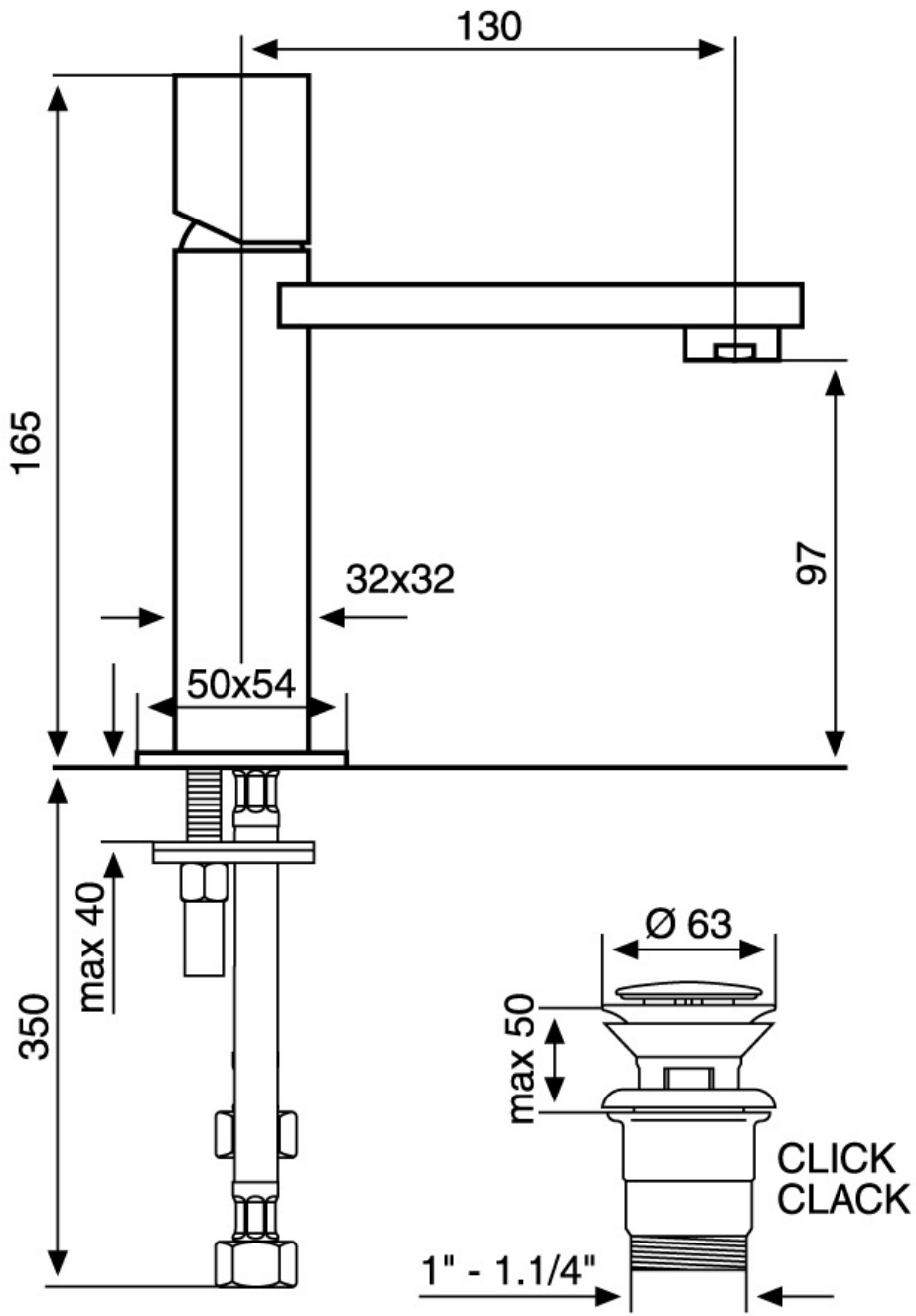
130
165
97
32x32
50x54
350
max 40
Ø 63
max 50
CLICK
CLACK
1" - 1.1/4"