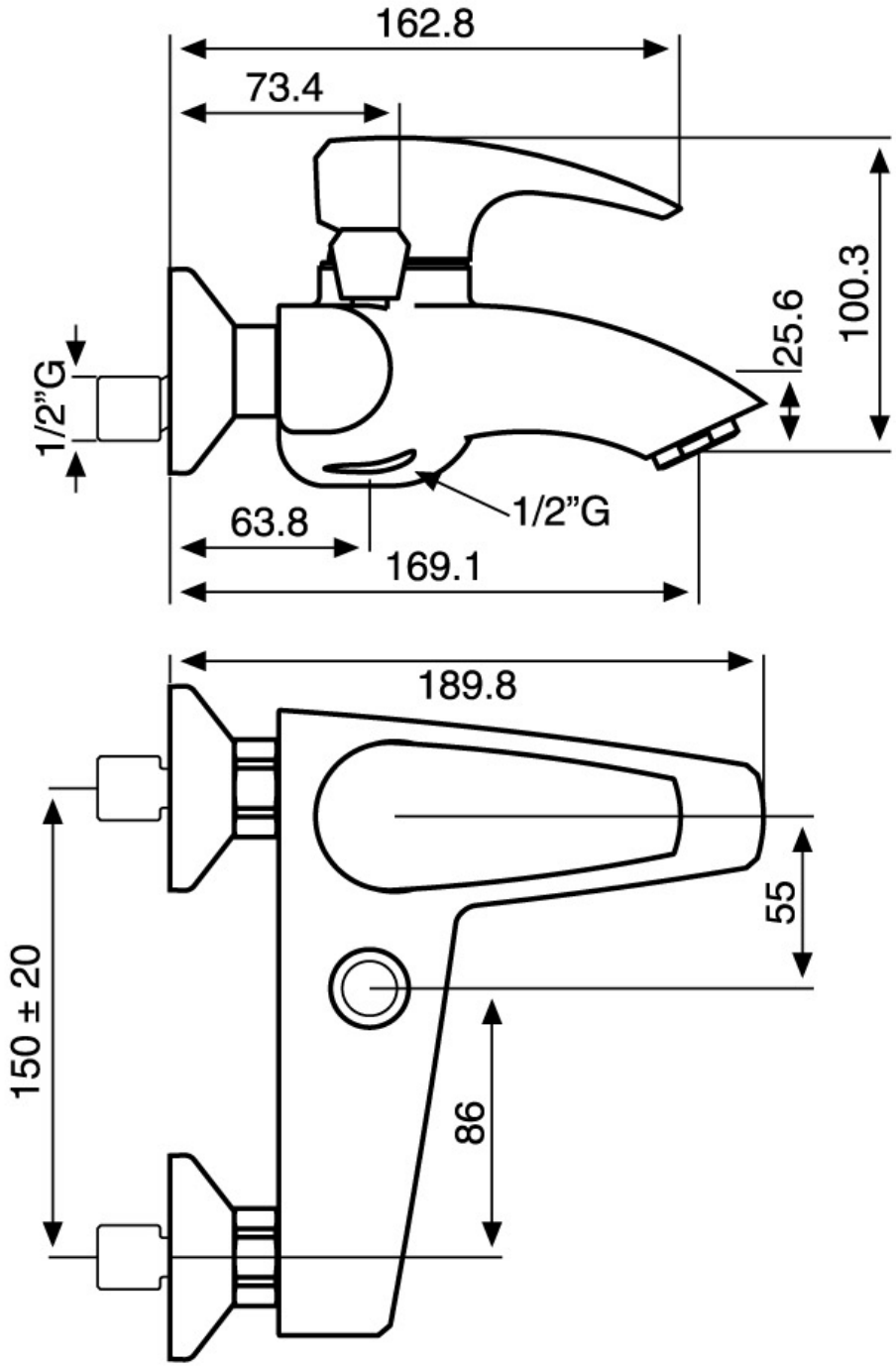
162.8
73.4
100.3
25.6
1/2”G
1/2”G
63.8
169.1
189.8
55
150 ± 20
86