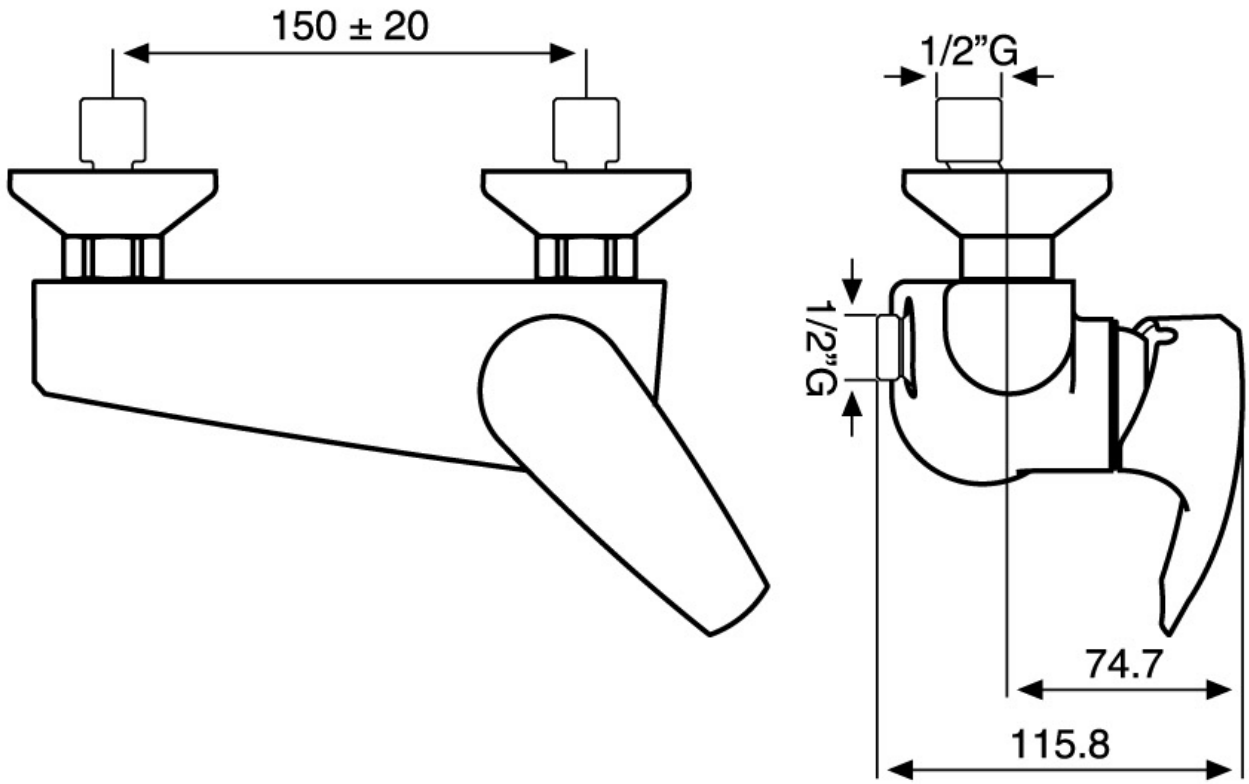
150 ± 20
1/2”G
1/2”G
74.7
115.8