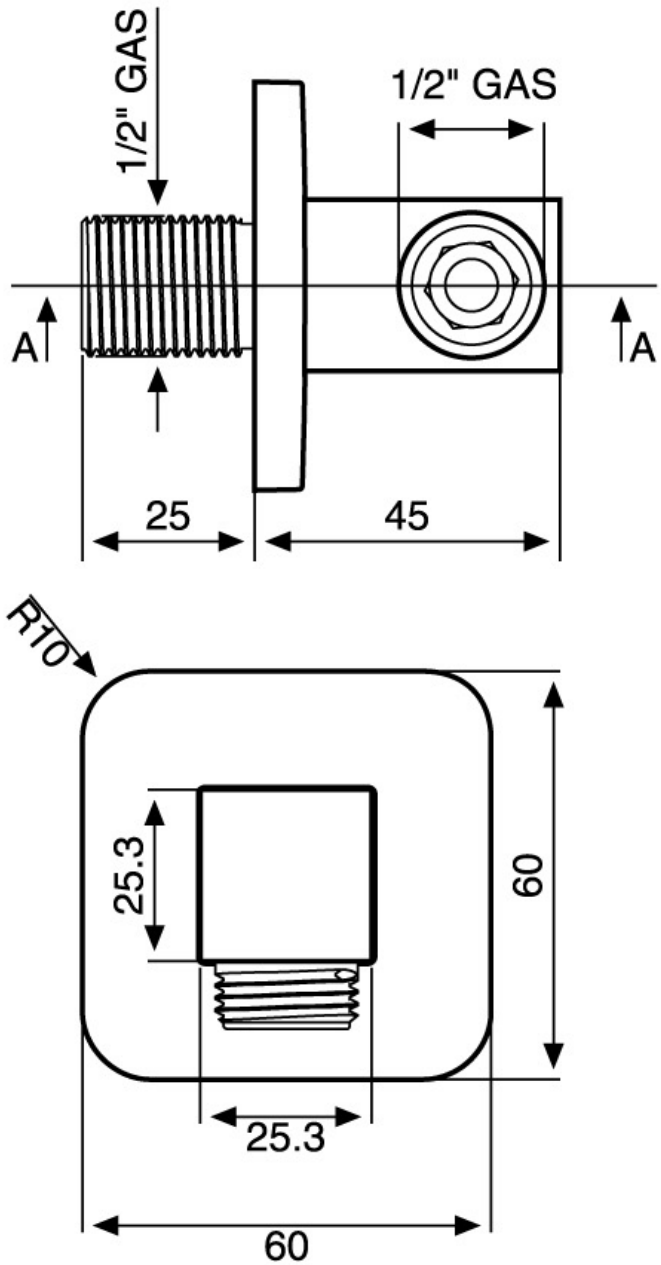
1/2" GAS
1/2" GAS
A
A
25
45
R10
25.3
60
25.3
60