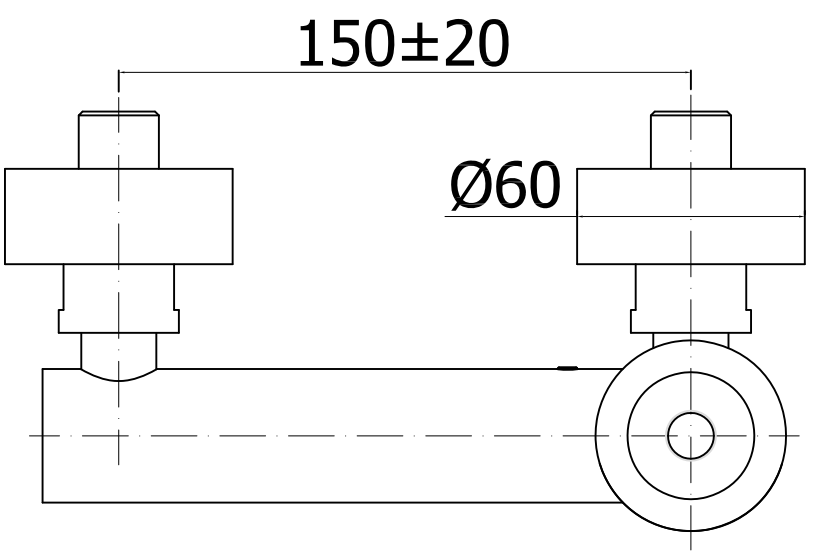
150±20
Ø60

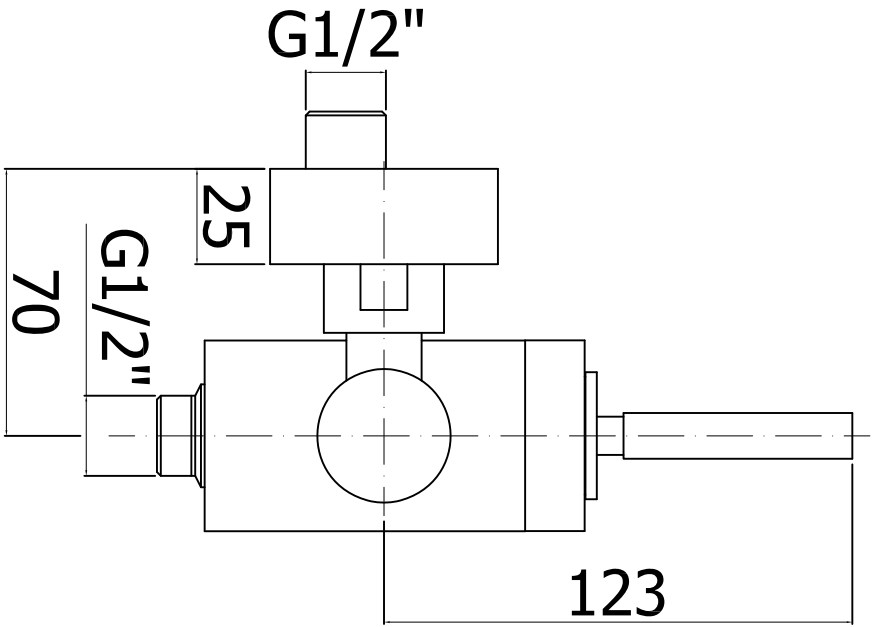
G1/2"
25
70
G1/2"
123