ELI 300

Semicolonna
Semi-podestal
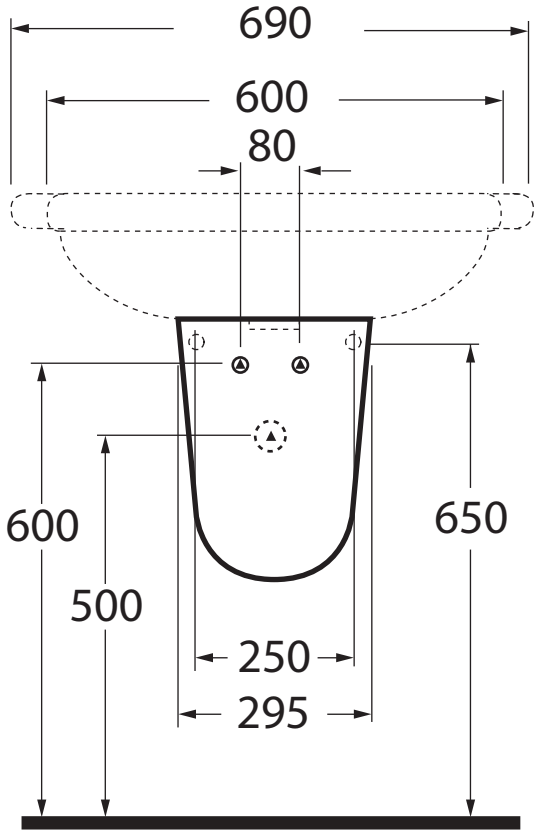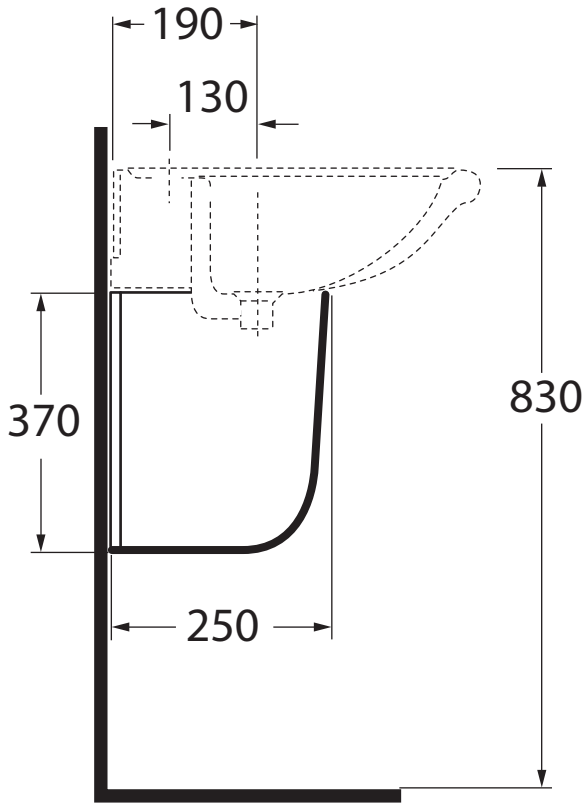
Dimensioni/dimensions:25x25xH37 cm
Peso/weight: 7 kg