kg 25

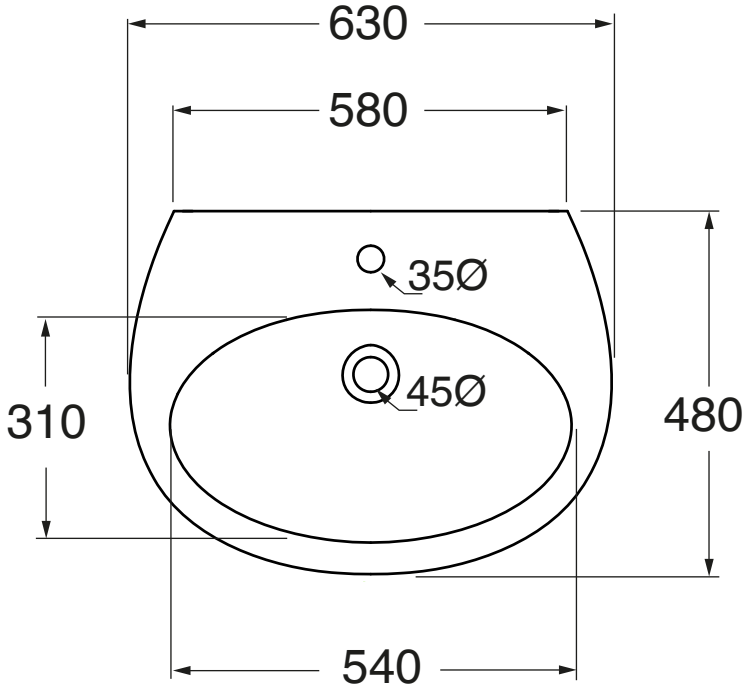
630
580
35Ø
45Ø
310
480
540

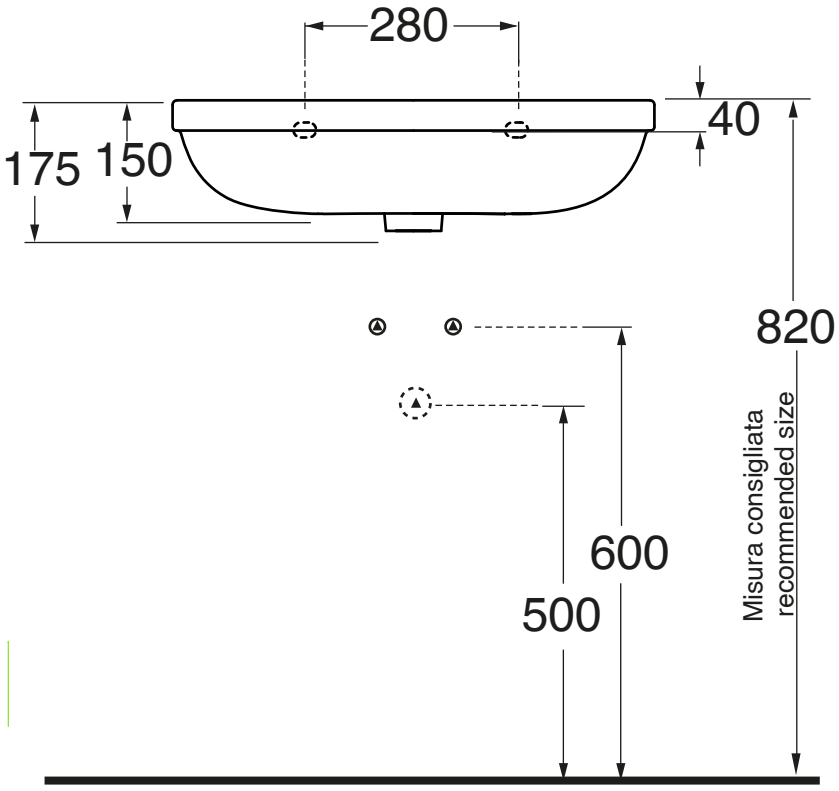
280
40
175
150
820
600
500
Misura consigliata
recommended size

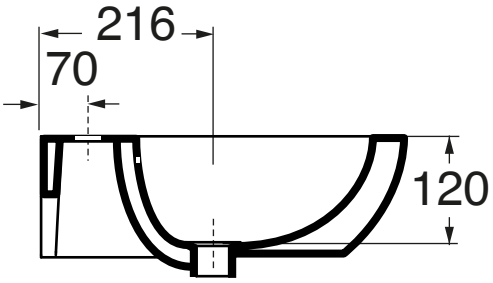
216
70
120