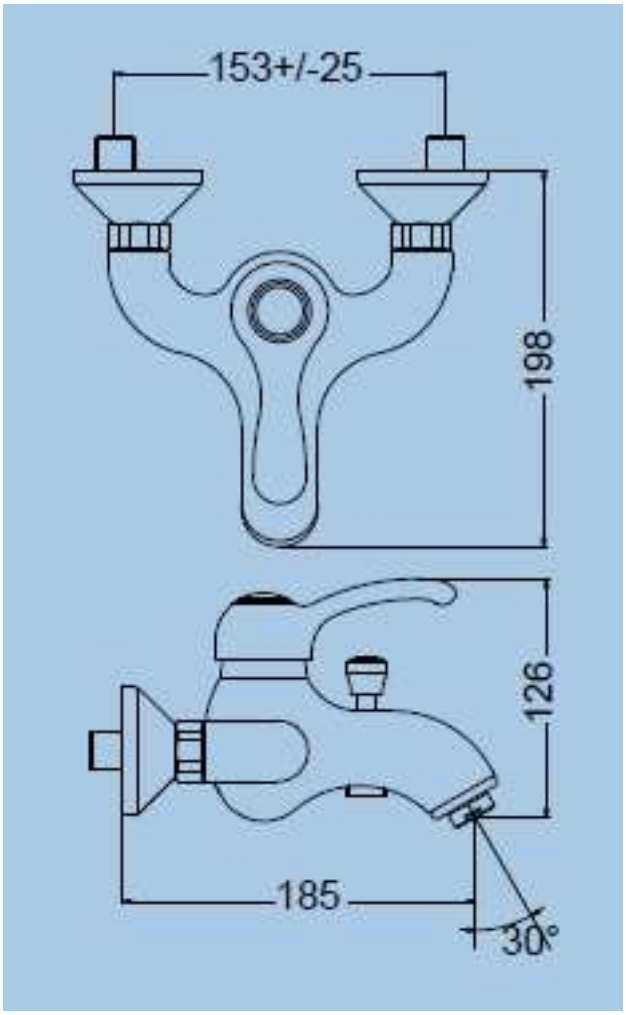
185
30°
126
153+/-25
198